I03-17

EDUCATIONAL WHEEL: FORTUNE OF HEALTH

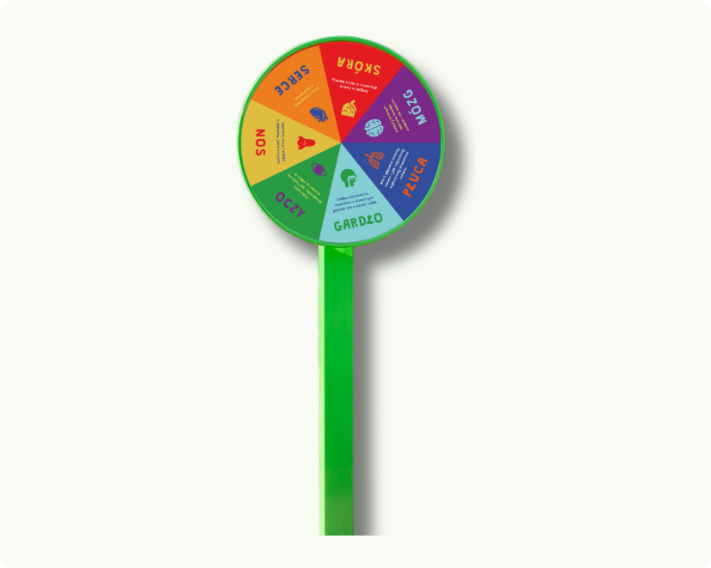

DIMENSIONS (L × W × H)
⌀ 65 × 17 × 186 cm
tolerance ±5%

SAFETY ZONE
⌀ 3.7 m

STANDARD
PN-EN 1176-1

COLOUR
RAL 6018
Green

A rotating educational wheel with movement tasks relating to physical activity and promoting healthy habits.

DIMENSIONS (L × W × H)

diameter 65cm | width: 17cm | height: 186 cm (height adjustable during ground installation)

MATERIAL

Steel structure; magnetic board; print made on self-adhesive film protected with UV-resistant laminate. Mechanical components made of stainless steel. Main structural profile: closed profile, black steel

PROTECTIVE FINISH

Galvanised, powder-coated structure

MOUNTING

Galvanised steel anchors L=75 cm, set in the ground and concreted; bolted connection to the equipment.

ADDITIONAL INFORMATION

The equipment has a declaration of conformity and a certificate from an accrediting body in accordance with the PN-EN 1176-1 safety standard.

TECHNICAL DRAWING

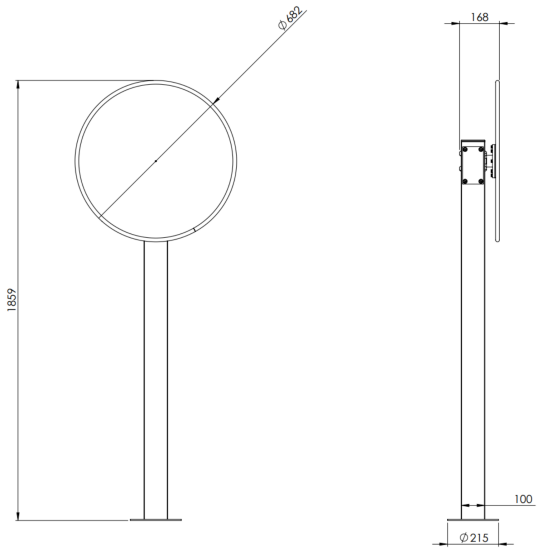

dimensions in mm

The structural design of the installation, its original and individual design form, the graphics incorporated into the installation, including in particular illustrations, visual compositions and print designs, as well as this product data sheet and all other technical documentation, constitute works within the meaning of the Polish Act of 4 February 1994 on Copyright and Related Rights (hereinafter referred to as the "Works"). The proprietary copyrights to the above-mentioned Works are vested in Park Edukacyjny Interakcje sp. z o.o., with its registered office in Bielsko-Biała, Poland, at ul. Stefana Okrzei 2, 43-300 Bielsko-Biała, entered in the register of entrepreneurs of the National Court Register under KRS number 0000423869, NIP: 7010345193, REGON: 146163128.

Park Edukacyjny Interakcje Sp. z o.o.
Stefana Okrzei 2, 43-300 Bielsko-Biała
NIP 7010345193

www.npz.pl/en
office@eduplayground.eu
+48 698 728 005

Country of origin: Poland
Country of manufacture: Poland